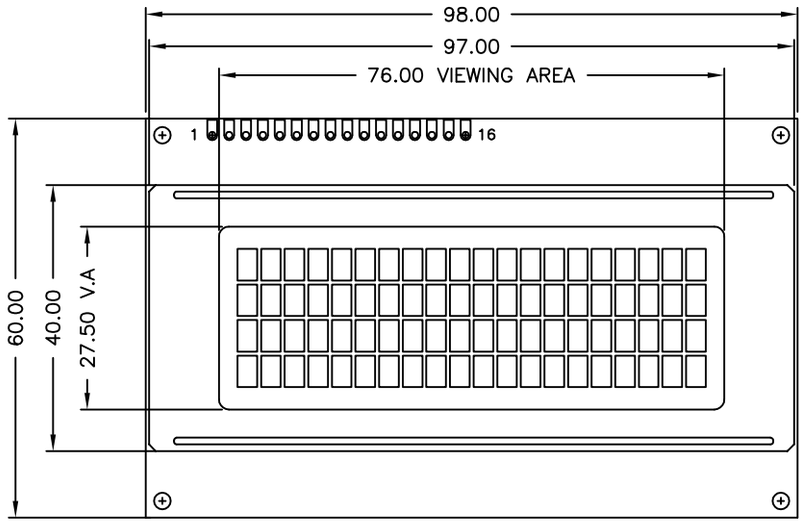

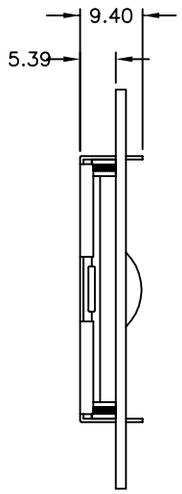

NON–BACKLIGHT

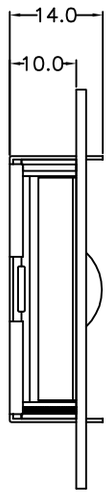

Y–G BACKLIGHT

CONNECTOR PINOUT			
PIN#	SYBMOL	FUNCTIONS	
1	GND	0V	POWER SUPPLY
2	V DD	+4.5 TO +5.5V	
3	V 5	0 TO +3V	
4	RS	H: DATA INPUT L: INSTRUCTION INPUT	
5	R/W	H: READ L: WRITE	
6	E	ENABLE SIGNAL	
7	DB0	DATA BUS LINES	
8	DB1		
9	DB2		
10	DB3		
11	DB4		
12	DB5		
13	DB6		
14	DB7		
15	+	LED	ARRAY
16	–	LED	

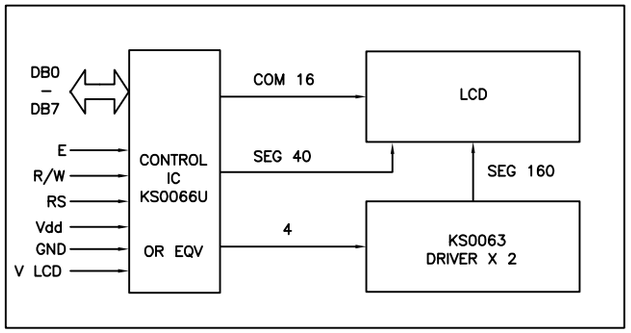

OCULAR FMA2041–03